PVDM
PRO & Consumer Audio

Quick Reference Guide to Teac A-3440:

Page:

2 General maintenance and common problems

3 Location of PCB's

4 Caps on the 4 **SYNC EQ PCB** and **POWER SUPPLY PCB**

5 **Tape Speed PCB**, **STOP SENSOR PCB** and **CONTROL PCB**

6 Caps on the 4 **AUDIO CHANNEL PCB's**

7 Caps on **FUNCTION PCB, Headphone PCB** and **BIAS OSC. PCB**

8 Tape tension adjustment

General maintenance and common problems

points of attention:

- **replace** 2 sparkkillers 4700nF that are glued to the power switch, they will explode!
- belt **replacement** is almost always necessary.
- **check** pinch roller rubber
- **check** seating of the 4 audio channel cards at bottom
- **check** solder joints for the through-pins on motherboard, they go bad -> resolder
- **check** head grooves, check for ridges. If so, relap.
- **check** solder joints above the heads → resolder if necessary
- **adjust** the deck for 240 V if possible (depending on model)
- **clean** the 4 INPUT select switches (mic att-mic-line) on front (from the inside)
- **clean** all input and output volume pots (from the inside)
- **check** 'jumpers' connections at the back. Clean and reseat them.
- **check** right tape arm working and check if it correctly switches off after tape end. Replace with Omron VX-5-1A2 switch.

maintenance:

- clean heads and tape path regularly, after every few hours of use, and before recording.
- every year oil:
  - the pinch roller shaft with 1 drop
  - the capstan shaft with 2 drops – inside after removing the dust cap ring

All PCB views are component side.

Location of parts:

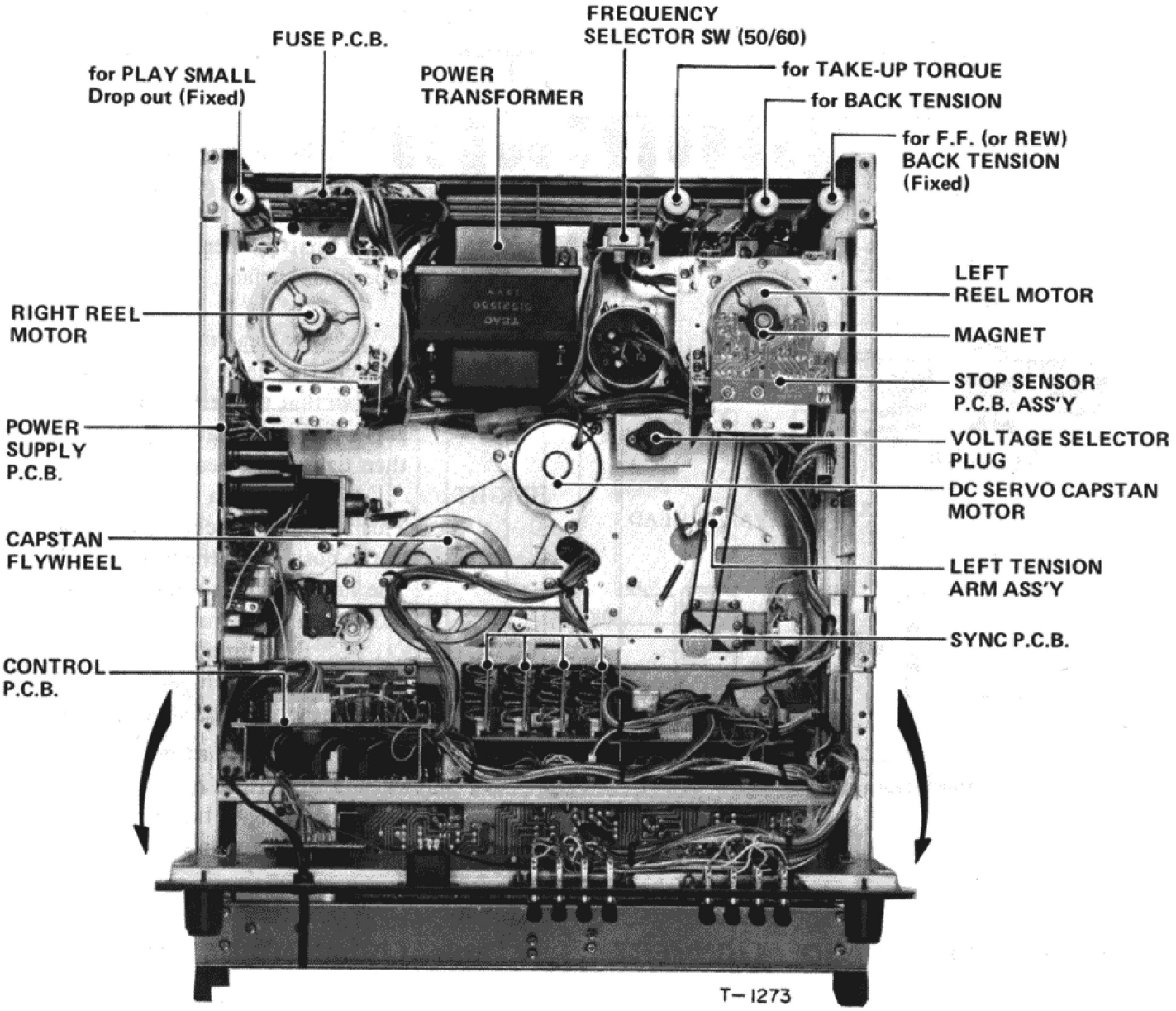

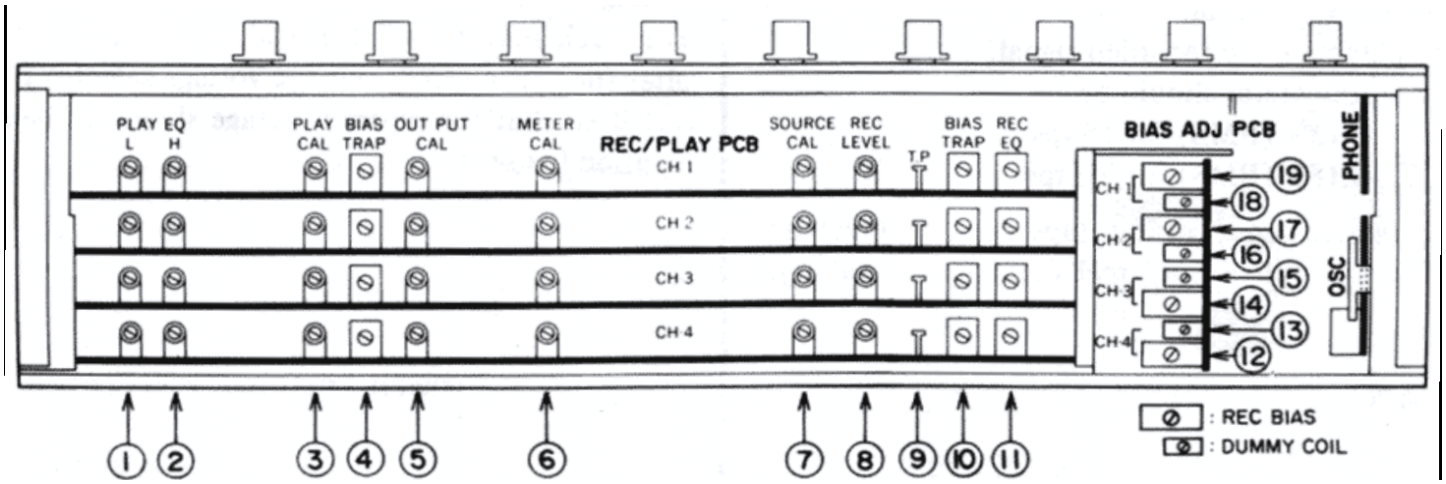

4=BIAS leakage (L101)

10=BIAS TRAP (L103)

Sync EQ PCB

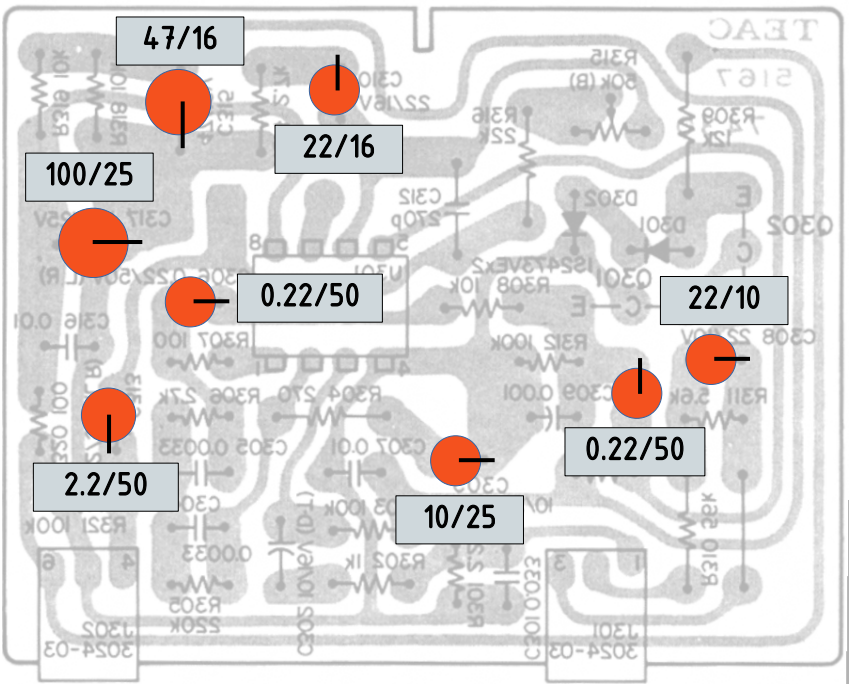

Cap:µ	#
.22	x2
2.2	
10	
22	x2
47	
100	
---	---
Tot.	8

Power Supply PCB

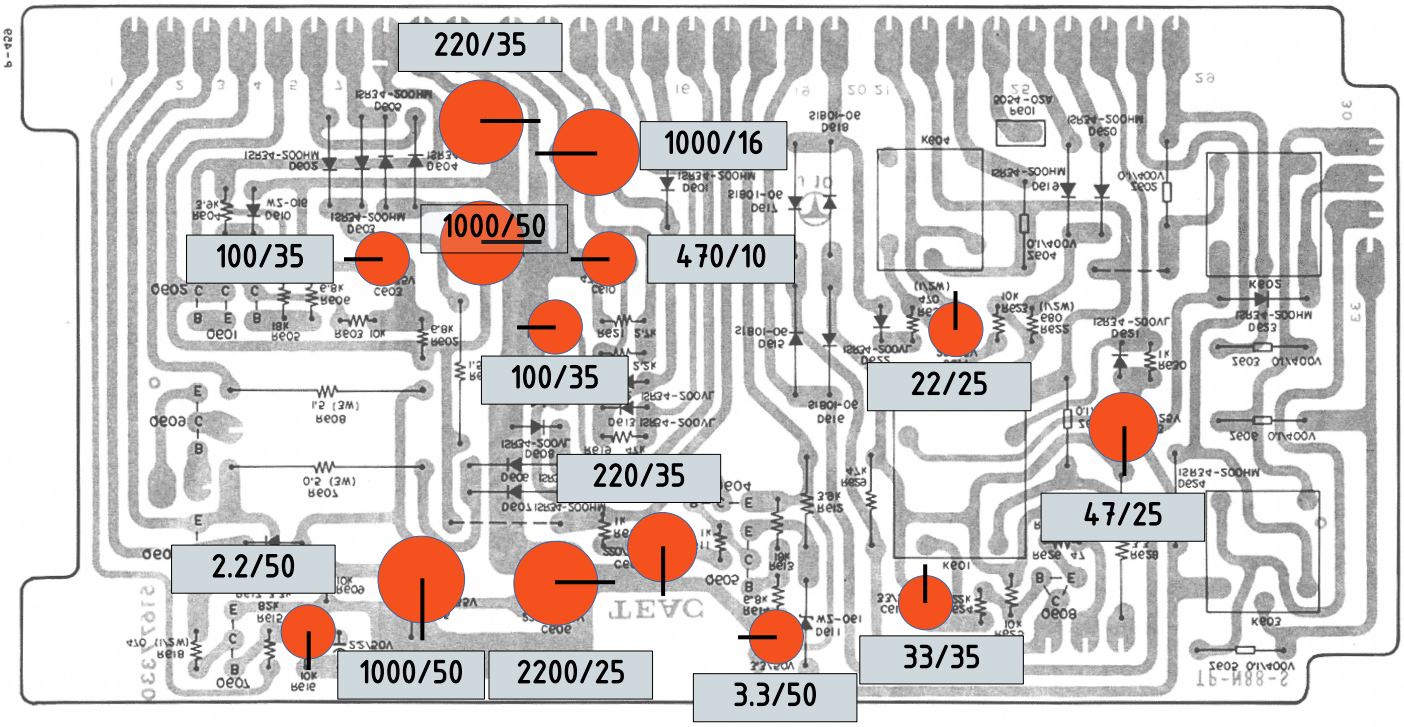

Cap-µ	V	#
2200	25	
1000	50	3
470	10	
220	35	2
100	35	2
47	25	
33	35	
22	25	
3.3	50	
2.2	50	
Total	15	

Tape speed PCB:

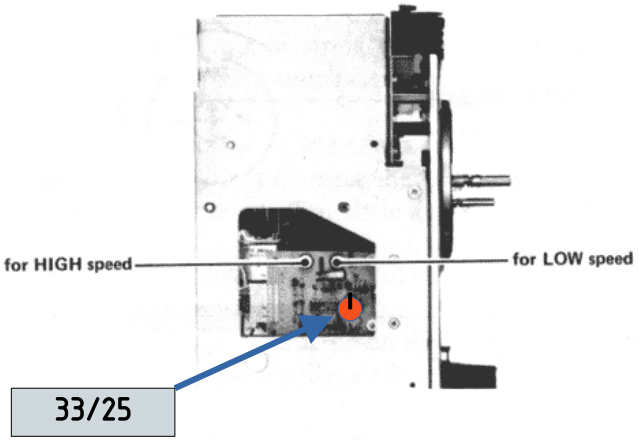

Fig. 7-7 Tape Speeds Adj. Location

Stop Sensor PCB:

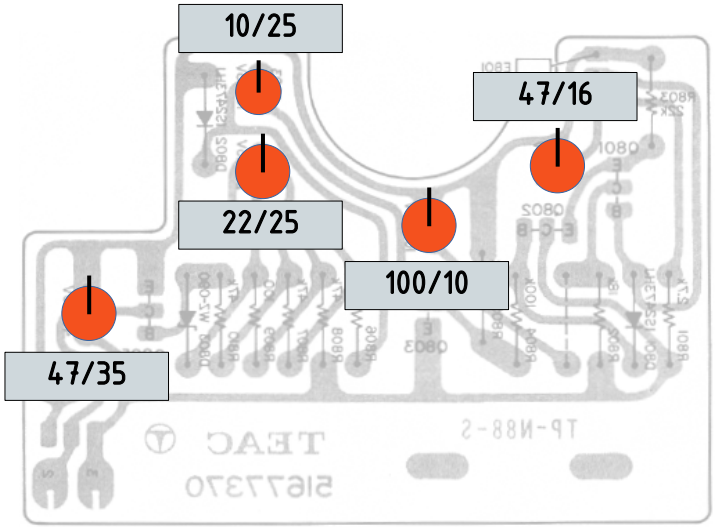

Control PCB:

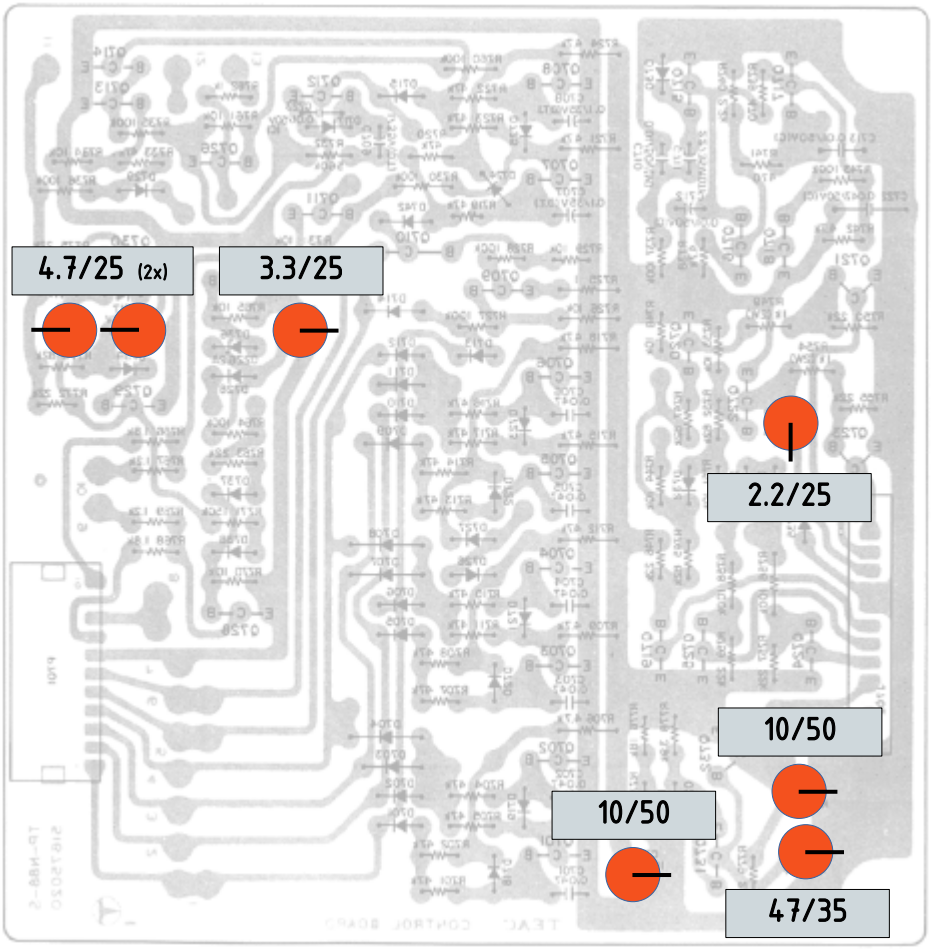

Audio channel PCBs (4x) REC/PLAY Amp.

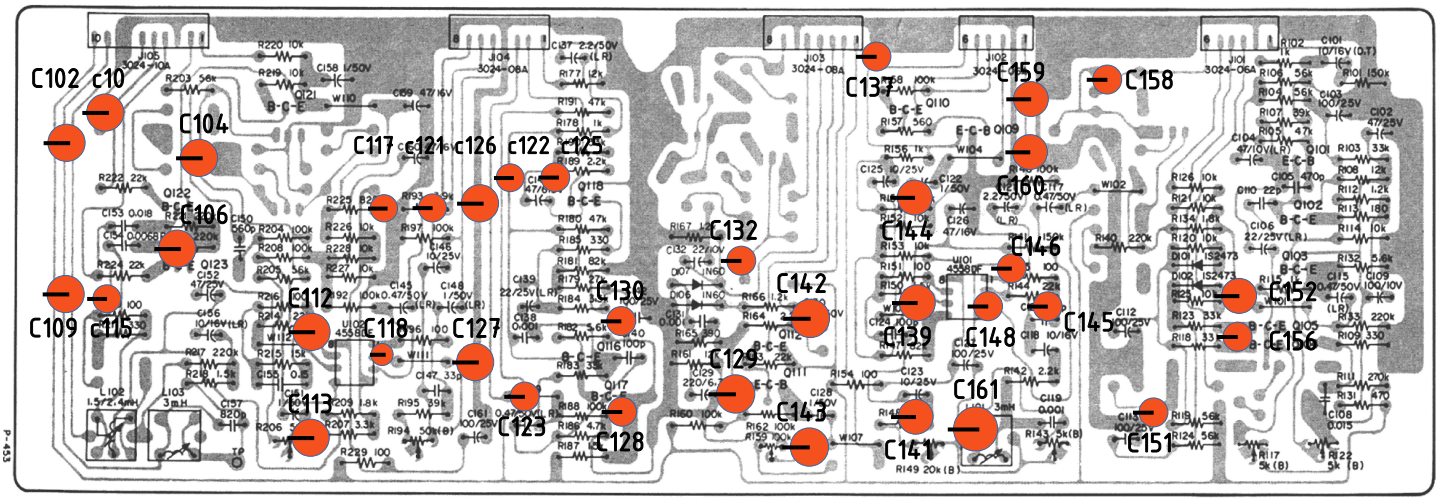

#	cap-µ	voltage	
c102	47	25	
c103	100	25	
c104	47	10	lr
c106	22	25	lr
c109	100	10	
c112	100	25	
c113	100	25	
c115	0.47	50	lr
c117	0.47	50	lr
c118	10	16	
c121	2.2	50	lr
c122	1	50	
c123	10	25	
c125	10	25	
c126	47	16	
c127	100	25	
c128	1	50	
c129	220	6.3	
c130	2.2	50	
c132	22	10	
c137	2.2	50	lr
c139	22	25	lr
c141	0.47	50	lr
c142	100	25	
c143	100	25	
c144	47	6.3	
c145	0.47	50	lr
c146	10	25	
c148	1	50	lr
c151	1	50	
c152	47	25	
c156	10	16	lr
c158	1	50	
c159	47	16	
c160	47	16	
c161	100	25	

lr is probably low leakage

cap-µ	count
0.47	4
1	5
2.2	3
10	5
22	3
47	7
100	8
220	1
	--

Total 36 x 4 boards

All caps left-side minus

Function PCB

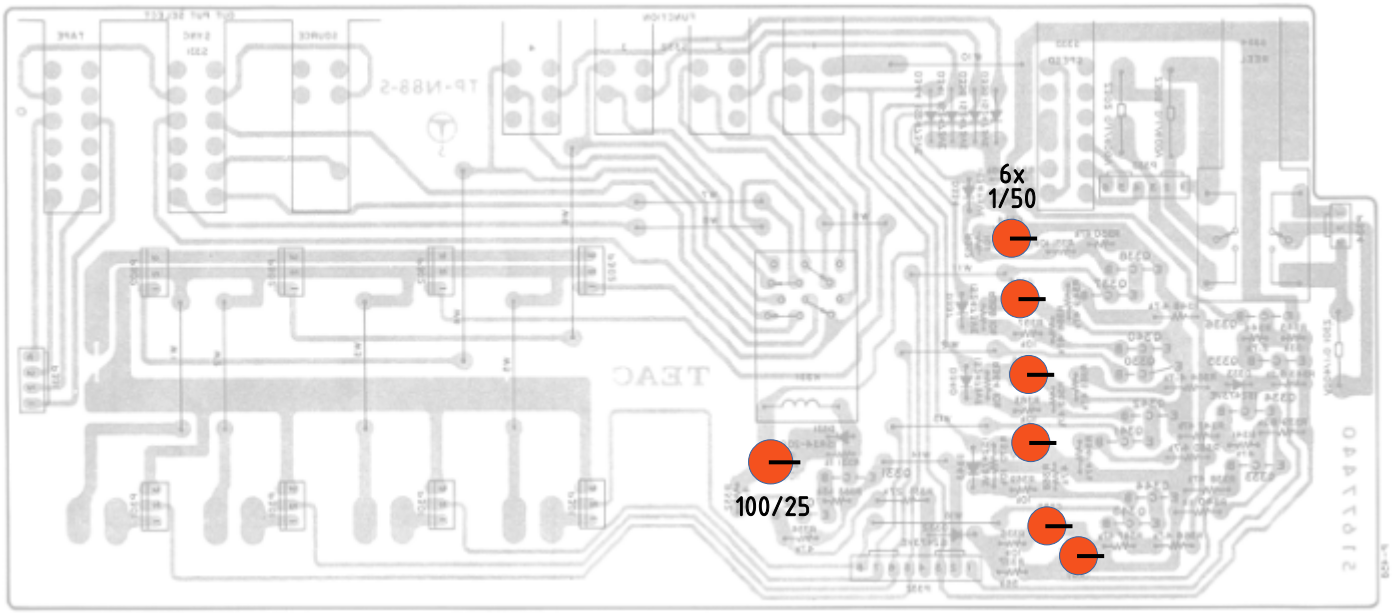

Headphome Amp PCB

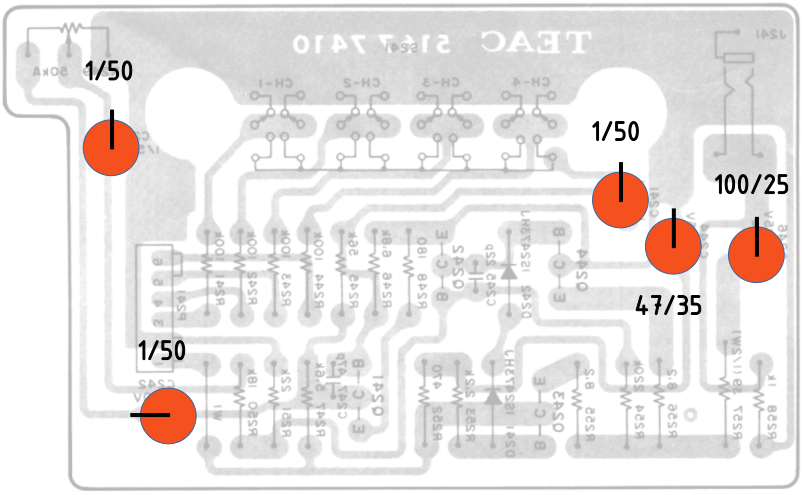

Bias Osc. PCB

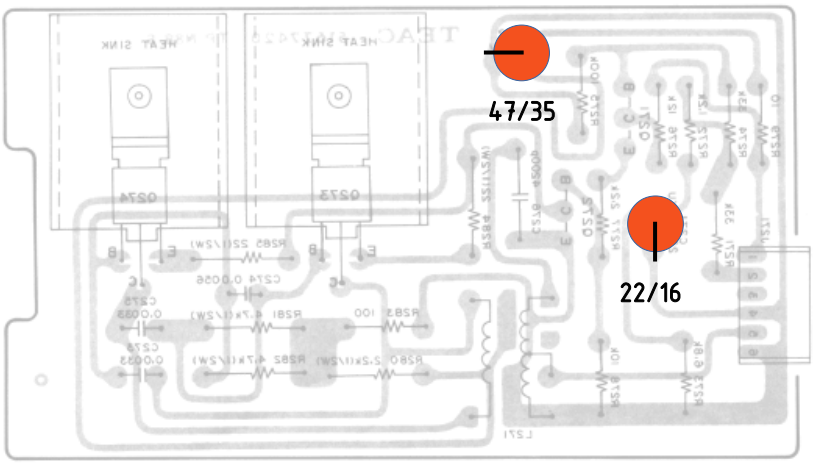

Tape tension adjustment

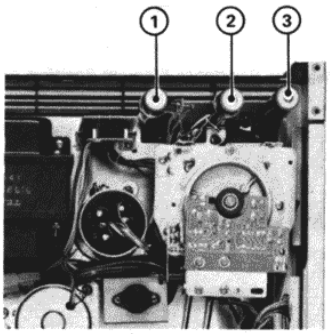

1	for TAKE-UP TORQUE
2	for BACK TENSION
3	for F.F (or REW) BACK TENSION

NOTE: No. 3 for no adjustment provided (FIXED).

REEL SW	BACK TENSION
LARGE	330 to 390 g-cm (4.6 to 5.5 oz-inch)
SMALL	180 to 220 g-cm (2.5 to 3.1 oz-inch)

REEL SW	TAKE-UP TORQUE
LARGE	770 to 830 g-cm (11 to 12 oz-inch)
SMALL	370 to 410 g-cm (5.2 to 5.7 oz-inch)

controls: select source - line - INPUT LEVEL max
remove shorts for encoder (!)

repeat 1-4 **line input level adjust:** (8-1)
400 Hz 61,5 mV to LINE IN (PM0.17)
adjust SOURCE CAL for 308 mV at ENCODER SEND
change input to 195 mV (PM.55)
adjust INPUT LEVEL POT to 308 mV (=specified input level; leave alone)

insert shorts for encoder (!)

repeat 1-4 **output amp gain adjust:** (8-3)
set OUTPUT LEVEL to 8 (=specified output setting; leave alone)
400 Hz 195 mV to LINE IN
adjust OUTPUT CAL for 308 mV at OUTPUT
adjust METER CAL for 0 VU

controls: select play - OUTPUT LEVEL at specified output setting (=8)
perform azimuth adjustment
remove shorts for decoder (!)

repeat 1-4 **playback performance adjust – output level setting:** (9-2)
play 400 Hz 0dB (reference level) from YTT-1003 (185 nWb/m)
adjust PLAY CAL for 308 mV at decoder send
insert short
check for 308 mV at OUTPUT
turn OUTPUT LEVEL to MAX
check for 615 mV +/- 2 dB at OUTPUT
reduce OUTPUT LEVEL until 308 mV at output
do not adjust OUTPUT LEVEL knob for the remainder of the calibration

repeat for LOW / HIGH speed **playback frequency part:** (9-4)
play test tape frequency part
adjust PLAY EQ L/H for flat responce +/- 2 dB

output select switch SOURCE
FUNCTION SELECT -> on for all channels
remove all input signal

repeat 1-4 **bias trap adjustment:** (11-1)
REC-PAUSE: adjust BIAS TRAP L103(!) for minimum reading on **SCOPE**(!) TestPoint and ground. (not voltmeter)

set speed select LOW - OUTPUT SELECT play
*thread **BLANK** tape*

repeat 1-4 **record bias adjustment:** (11-2)
apply 7 kHz at 61,5 mV to LINE IN (PM0.17)
turn BIAS trimmer on small pcb fully counter-clockwise
while recording blank tape turn clockwise until peak at OUTPUT, then roll off 2 dB

check that LINE and OUTPUT controls are still at specified positions

repeat 1-4 **record level set:** (11-3)
apply 400 Hz 195 mV to LINE IN (PM.55)
while recording adjust REC LEVEL R206 for 308 mV at OUTPUT

repeat 1-4 **frequency response:** (11-4)
speed low
record a sweep 40 Hz-20 kHz at 61,5 mV at LINE IN (PM.17)
monitor the sweep and adjust REC EQ
speed high
record a sweep 40 Hz-22 kHz at 195 mV at LINE IN (PM.55)
check frequency response

OUTPUT controls maximum, OUTPUT SELECT to PLAY

repeat 1-4 **BIAS LEAKAGE:** check (11-8)
put the deck in record mode
adjust BIAS LEAKAGE L101(!) for minimum reading at OUTPUT (< 3 mV) on scope

[PM numbers between brackets are Vpk-pk settings for the PM5190 signal generator]